지시외 용접치수	지시외 모서리부분	지시외일반치수 허용	절삭가공	급	0.5 ~ 6	6 ~ 30	30 ~ 120	120 ~ 315	315 ~ 1000	1000 ~ 2000
a	지시외일반 모서리제거 C = 0.3~1.2 R = 0.3~1.2			급	±0.1	±0.2	±0.3	±0.5	±0.8	±1.2

표 면 거 칠 기									
Ra	25	12.5	6.3	3.2	1.6	0.8	0.2	0.1
Rmax	100S	50S	25S	12.5S	6.3S	3.2S	0.8S	0.4S
다듬질	~	▽	▽▽		▽▽▽		▽▽▽▽	

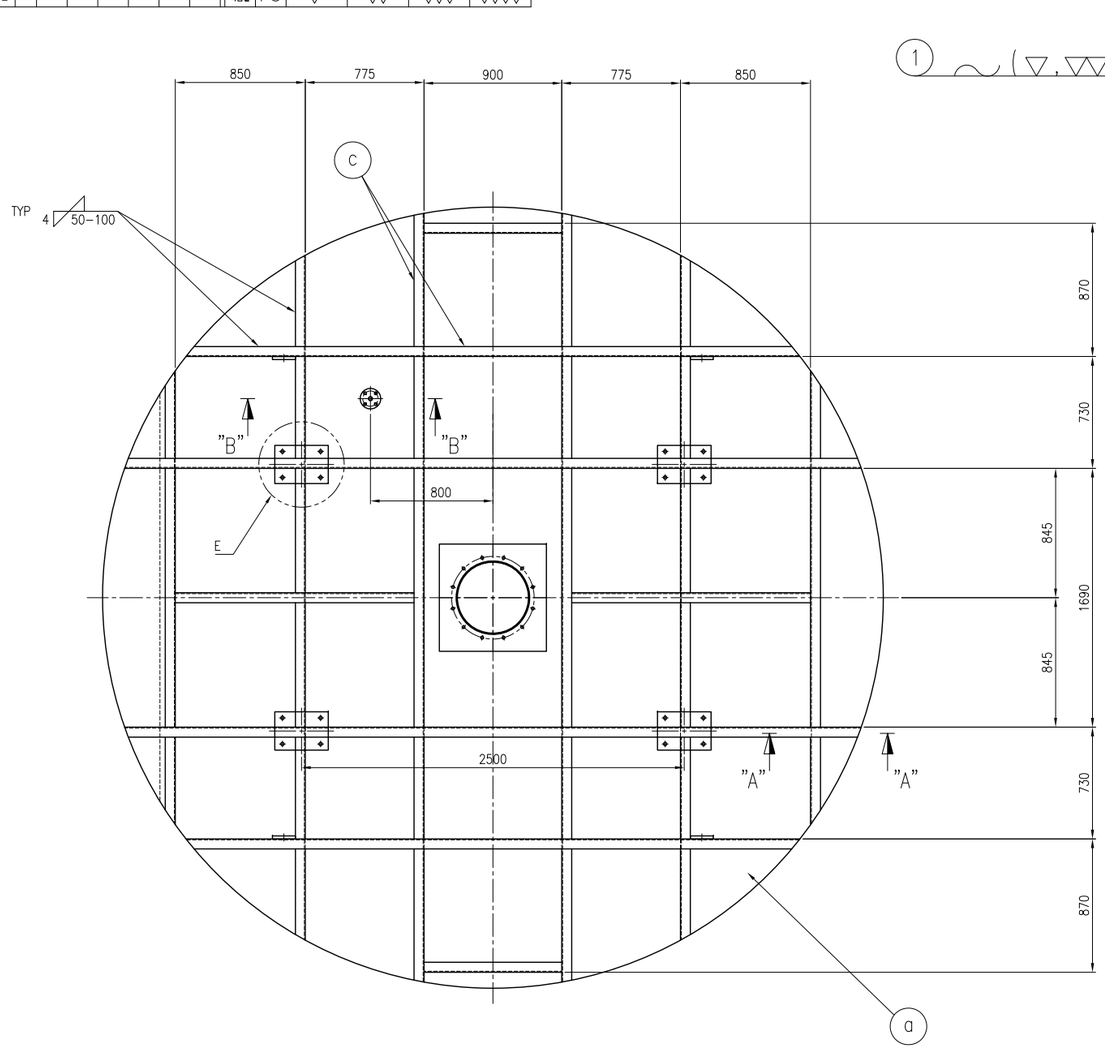

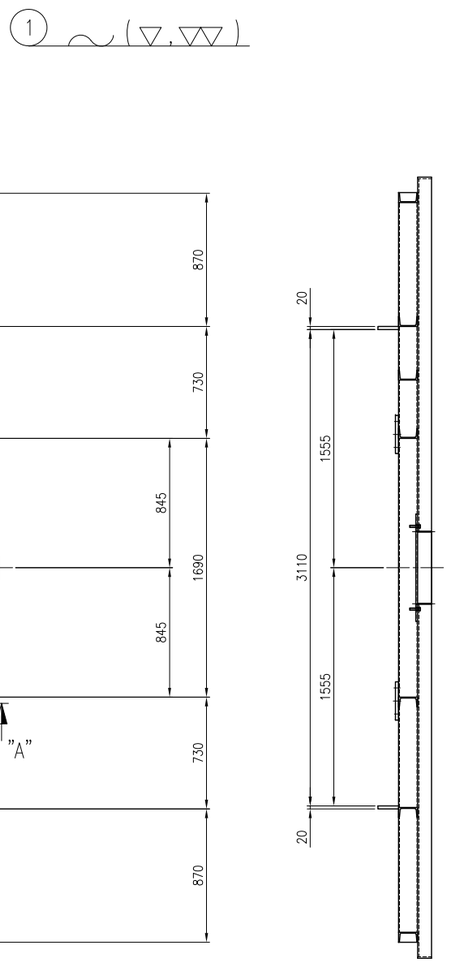

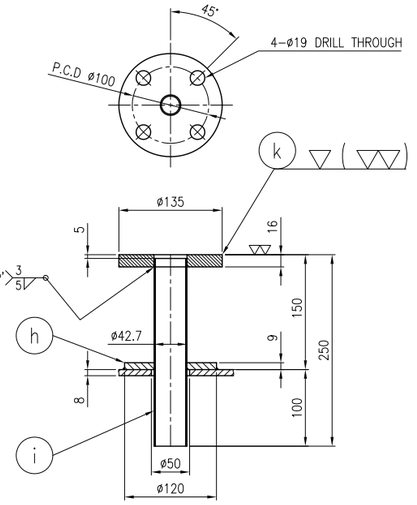

SECTION : "B"-"B"
(S=1/4)

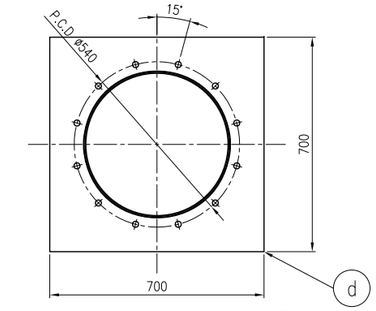

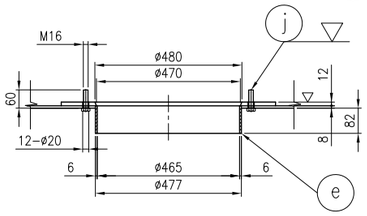

DETAIL "D"
(S=1/10)

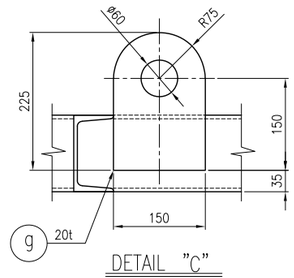

DETAIL "C"
(S=1/5)

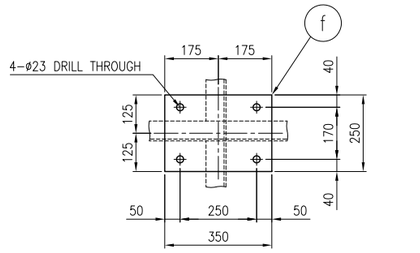

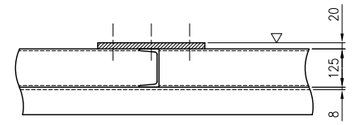

DETAIL "E"
(S=1/10)

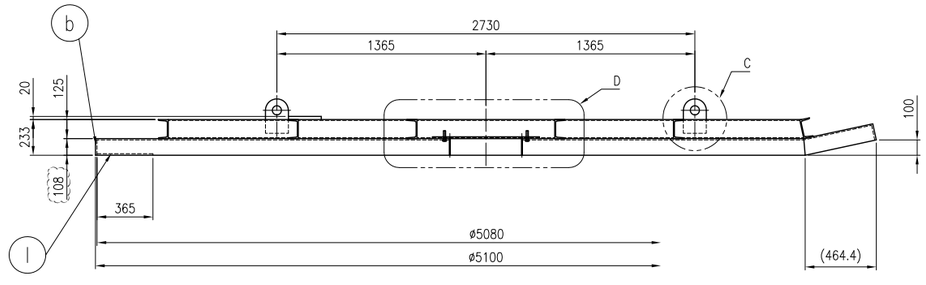

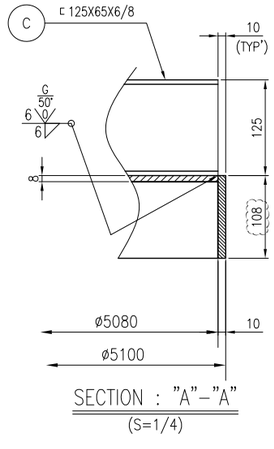

SECTION : "A"-"A"
(S=1/4)

NO.	DESCRIPTION	MAT'(KS)	UNIT QUANTITY	TOTAL QUANTITY	PERUNIT WEIGHT(kg)	TOTAL WEIGHT(kg)	REMARK'S
l	PLATE	SS275	EA	1	–	–	10T
k	FLANGE	SS275	EA	1	–	–	32Ax10K SO FF
j	HEX. BOLT	SM45C	EA	12	–	–	M16x60L
i	PIPE	SPP	EA	1	–	–	32A
h	PLATE	SS275	EA	1	–	–	9T
g	PLATE	SS275	EA	4	–	–	20T
f	PLATE	SS275	EA	4	–	–	20T
e	PLATE	SS275	EA	1	–	–	6T
d	PLATE	SS275	EA	1	–	–	12T
c	CHANNEL	SS275	M	–	–	–	ㄷ125X65X6/8
b	PLATE	SS275	EA	1	–	–	10T
a	PLATE	SS275	EA	1	–	–	8T
1	COVER	–	SET	1	–	–	

NO.	DATE	REVISION & DESCRIPTION	REVIEWED	CHECKED
4				
3				
2				
1	–	–		

SIGNATURE

KRST
대한동방 주식회사

TITLE	POSCO 3제강 TEEMING LADLE DRYER COVER(1/2)				SCALE	1/20	PROJECTION	
					SIZE	A1	DIMENSION	mm
	DRAWN	CHECKED	REVIEWED	APPROVED	TEMCO. DWG. NO.			
SIGNATURE	–	–	–	–				
DATE	–	–	–	–				

지시외 용접치수	지시외 모서리부분	지시외일반치수 허용치	절삭가공부분	구분	0.5 ~ 6	6 ~ 30	30 ~ 120	120 ~ 315	315 ~ 1000	1000 ~ 2000
a=0	지시외일반 모서리제거 C = 0.3~1.2 R = 0.3~1.2			급	±0.1	±0.2	±0.3	±0.5	±0.8	±1.2

표면거칠기									
Ra	▽	25	12.5	6.3	3.2	1.6	0.8	0.2	0.1
Rmax		100S	50S	25S	12.5S	6.3S	3.2S	0.8S	0.4S
다듬질	~	▽		▽▽		▽▽▽		▽▽▽▽	

① ~(▽,▽▽)

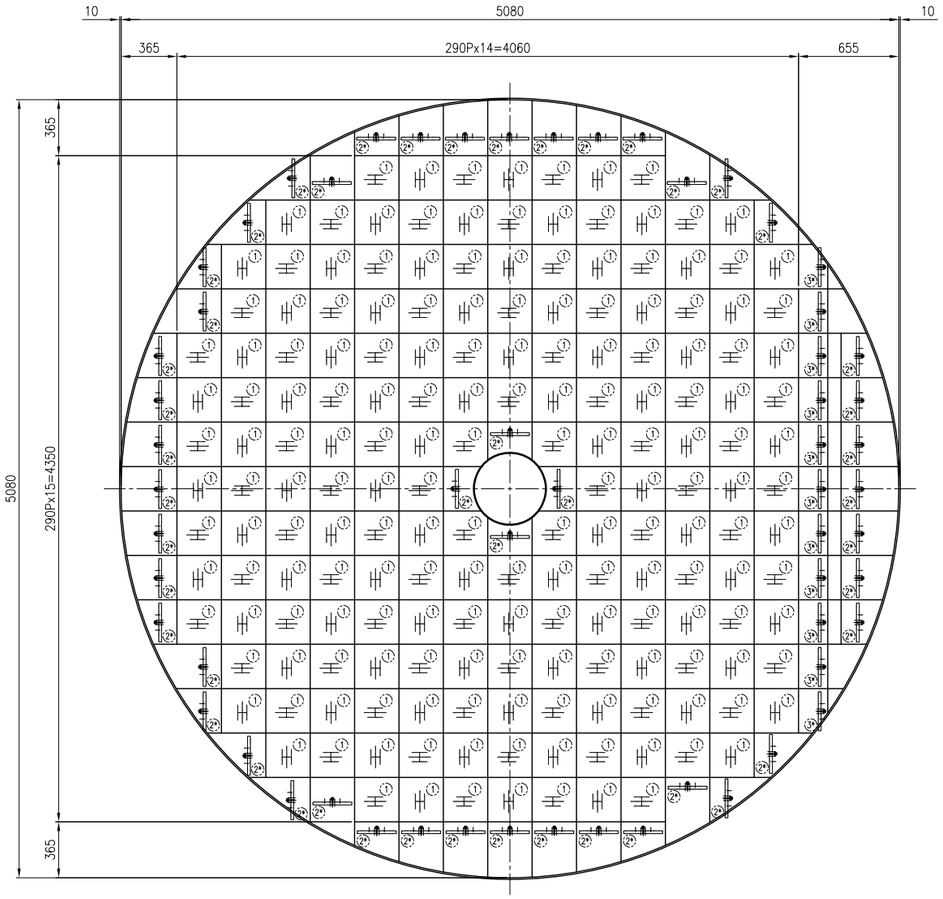

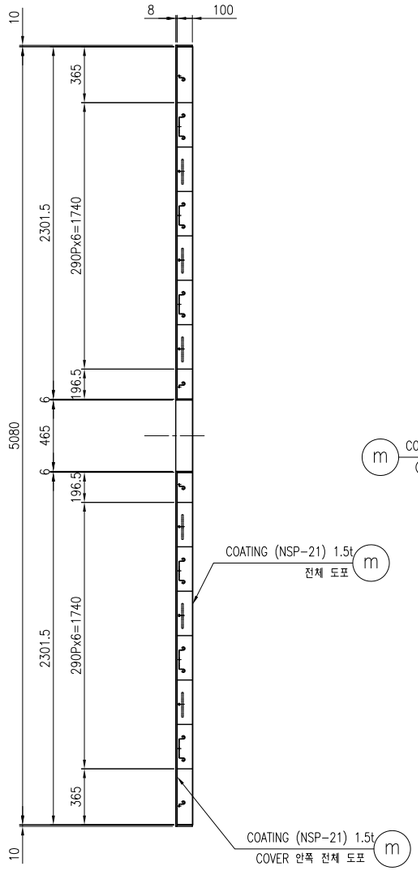

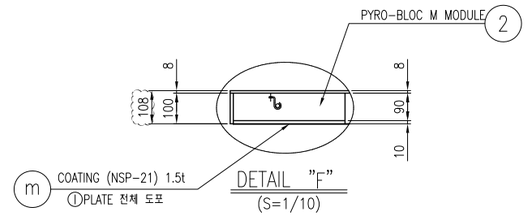

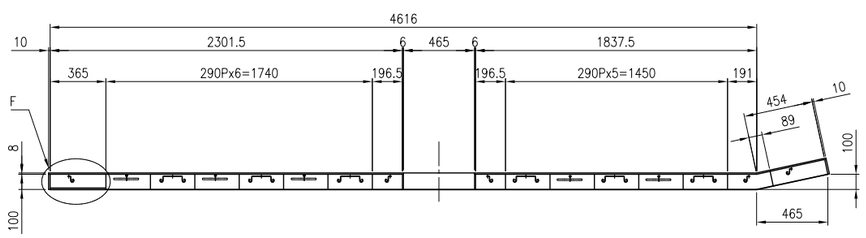

<PYRO-BLOC M MODULE>

ITEM : Pyro-Bloc ZR Grade
Chemical Composition : Al2O3-37.5%/ SiO2-47%/ ZrO2-15.5%
Density : 240Kg/M3
Anchor with welding system automatically (SS310)

NO.	DESCRIPTION		MAT'(KS)	UNIT QUANTITY	TOTAL QUANTITY	PERUNIT WEIGHT(kg)	TOTAL WEIGHT(kg)	REMARK'S
AN	M-STUD BOLT&NUT		SS310	EA	240	–	–	M0310
③	PYRO-BLOC M MODULE	305X305X100T	–	EA	181	–	–	240kg/m3,1430°C
②	PYRO-BLOC M MODULE	305X600X100T	–	EA	48	–	–	240kg/m3,1430°C
①	PYRO-BLOC M MODULE	305X600X100T	–	EA	11	–	–	240kg/m3,1430°C
m	COATING		NSP-21	LOT	–			1.5t 전체 도포
1	COVER		–	SET	–	–	–	

NO.	DATE	REVISION & DESCRIPTION	REVIEWED	CHECKED
3				
2				
1				
0	–	–		

SIGNATURE

KRST 대한동방 주식회사

TITLE: POSCO 3제강 TEEMING LADLE DRYER COVER(2/2)

	DRAWN	CHECKED	REVIEWED	APPROVED
SIGNATURE	–	–	–	–
DATE	–	–	–	–

SCALE	1/20	PROJECTION	
SIZE	A1	DIMENSION	mm
TEMCO. DWG. NO.	---------- 0		